Using the Harris Platinum*i* RF Module on 50 MHz (Rev 1.2)

From what we were told, this RF amplifier module is easily capable of 1500W PEP (750W average power)[1] of RF output using sixteen ON4402H Lateral Diffusion mosfet (LDMOS) transistors which have 19db of gain across their intended operating frequency. The LDMOS transistors are used in dual pairs (two sets of two) on four separate RF pallets having individual heat sinks. Given the 19db gain rating, 9.4 watts of average input power should yield approximately 750 watts of average output power. (Find yourself a dbm to watts chart online, it will be very helpful for becoming familiar with decibel to watt conversions, dbm, dbW, etc.)

We were told the amplifier requires 50 Volts DC at up to 50 amperes of current. We tested a CH2 amplifier at 8 watts RF input for 650 watts average power output on 50.1 MHz with 33 amperes of current drawn on a 35A power supply. It may well do rated output with higher efficiencies, we simply did not have a power supply rated for that service level. We appeared to be close to the 1db compression point (18 percent below rated output) in the RF test, but did not confirm the 1db compression point. Given that replacement transistors for this RF module would likely be scarce/expensive, staying 10~15 percent or more below rated power seemed appropriate. Idle current draw with no RF power applied to the input was 8.0~8.1 amperes.

No attempts were made to tune the amplifier from the factory CH2 tuning. We were able to view the schematic, but you are cautioned this information is proprietary as the Platinum*i* product line is still sold on the market. Let's outline an RF pallet in general and identify the frequency-dependent components. Refer to the partial schematic diagram at the end of this document.

There is a coaxial 50 ohm power splitter on the input to the RF pallet with a 2W 200 ohm balance resistor. Each leg from the power splitter feeds a (10:1?) toroidal step-down transformer/splitter designed for maintaining a constant phase relationship (also somewhat broadband in nature). Each LDMOS gate sees a 5.1 ohm 2W load resistor as well as frequency-dependent capacitors C8/C19, C5/C11, and C16/C22.

The output (drain) of each mosfet is routed through a frequency dependent inductor (L5/L6 and L7/L8) and shunted by frequency dependent capacitors C23 and C33 before going to the 50 ohm step-up, constant phase, toroidal transformers.

[1] See: www.broadcast.harris.com/media/Platinum-i-Transmitter_25-8421.pdf

Also included is a feedback circuit from the drain to the gate of each mosfet for impedance matching. This is a parallel LR circuit comprised of L1/R21, L2/R22, L3/R23 and L4/R24. There is a 2W 100 ohm resistor in series on each side of the parallel LR components.

B+ is provided to each mosfet drain via RF chokes L9, L10, L11, and L12 and associated de-coupling capacitors.

The 50 ohm outputs from each transistor pair and then combined with another coaxial combiner which has a 10W 200 ohm balancing resistor for the RF pallet output.

The chart below indicates the frequency dependent component values:

RF FD	CH#E2	CH2	CH#E3	CH3	CH#E4	CH4	CH5
L1~L4	20T	20T	20T	13T	13T	13T	13T
C8,C19	560pf	270pf	270pf	120pf	120pf	120pf	120pf
C23C33	43pf	33pf	22pf	43pf	43pf	43pf	43pf
C5C11C16C22	510pf	270pf	270pf	270pf	270pf	270pf	470pf
L5L6 L7L8	2.5 in loop	1.85 in loop	1.85 in loop	1.8 in loop	1.8 in loop	1.7 in loop	1.25 in loop
R21R22R23R24	2K 1/2W	2K 1/2W	2K 1/2W	n/a	n/a	620 □ 1/2W	n/a

Safety

There are the usual safety precautions with respect to the power supply voltage (yes, 50V can kill you under the right circumstances) and RF exposure. Do not run the amplifier at full power with the bottom cover off---ever. If it is necessary to perform some bias adjustments or other "live" tests use a minimum RF drive level to achieve the intended test function (1/2 watt for example) and make some temporary partial bottom covers to minimize radiation from the other pallets.

Another safety issue is the "potential" (not confirmed) presence of Beryllium Oxide (BeO) content in some ceramic components used in the amplifier module. Beryllium oxide (BeO), in solid form and as contained in finished products, presents no special health risks. However, like many industrial

materials, beryllium oxide does present a health risk if handled improperly. The inhalation of beryllium oxide dust, mist or fume can cause a serious lung condition in some individuals. The degree of hazard varies depending on the form of the product, and how the material is processed and handled. You must read the product specific Material Safety Data Sheet (MSDS) for additional environmental, health, and safety information before working with any beryllium containing material.

One online source for this MSDS information is available at http://www.brushwellman.com/EHS/Safety%20Facts/SF301.pdf

It is not known if the ceramic load resistors or transistors in this Harris amplifier module contain any BeO material. But to be on the safe side, treat these ceramic components accordingly. As long as these components are not physically broken or chipped, there should be no immediate safety concerns.

A Few Suggestions

There are no replacements available, if you make a mistake, it could be the end of the road. So check <u>everything</u> carefully, from cables to connectors to power supplies. <u>Load test</u> your power supply with a suitably rated resistive load to be certain it will function properly before using it for amplifier operation. Pull the covers on the amplifier module before powering it up and carefully double check to make sure no loose screws, nuts, or metal flakes are present. This check will also get you familiar with the amplifier. Don't work on the amplifier when you are tired, distracted, etc.

We tested one of these modules with two different radios for input power. An FT-817 that made about 4.0 watts output which yielded around 400W average power output, and an FT-847 which we ran around 32 watts output into a 6db power attenuator to provide about 8 watts of drive to the amplifier module.

Note that the module would trip the high RF input power fault code without the 6db attenuator in line using the FT-847, even at it's lowest 2W power level. No RF power level faults were encountered with the 6db attenuator on the input RF line to the amplifier with the FT-847. There must have been some DC (or other signal) on the input coax line that was shunted to ground by the attenuator when the FT-847 was used that was causing the fault code condition. If you get a strange RF power fault code (Red LED, two flashes) when trying to feed RF power to the amplifier module, try an attenuator on the RF input line.

For Kenwood TS-2000 radio users, set the "AMP RF DELIVERY CONSTANT" to 25ms to prevent occasional Harris amplifier module fault codes. Some other high-end transceivers with 6 meter coverage also have a transmit delay feature available from their menus. In other words, you can sequence the relays,

enabling the Harris amplifier module into a 50 ohm load 25 ms before the TS-2000 applies a drive signal.

Fault Codes and Amplifier Reset

When a fault code occurs, the logic board in the amplifier takes the B+ offline. Simply lift the enable line from ground to erase the fault code. The next time the enable line goes to ground, the amplifier B+ should come back online and the green status LED on the front panel should return.

Cooling

We were told this amplifier module needs approximately 250CFM of cooling air at full power output. We were able to use a stack of five muffin fans to offer cooling for test purposes that was about one-half of that total CFM rating. One possible cooling solution is a rack of six 65cfm Muffin fans sold by Fair Radio Sales for $53.00. Look in their section for Fans & Blowers. A set of five at 65 CFM would be 325CFM. Four of these 65CFM fans would probably be adequate, but 5 fit across the module front to back. We added some aluminum angle stock and sheet aluminum to position the fans end-to-end about 1/2 inch above the heat sinks from front to back (See Photo). There are two existing fasteners on the back of the front panel which can be removed and the threaded holes used to mount small L-brackets for angle-rail mounting. Two holes had to be drilled on the back panel of the amplifier module to mount the rear L-brackets (not shown).

Fan Rails Added to Module (Above)

Remember, cooling is vitally important, if you skimp on cooling it could cost you a module failure. Harbor Freight tools sells some affordable non-contact point-and-shoot IR thermometers. Use one to monitor heating in the amp module to pinpoint any potential thermal issues. Here is a picture of the cooling setup for testing purposes.

Make sure all the fans are blowing air out the top. Note the slots between the RF pallets on the RF module. These draw air from the lower portion of the module enclosure. Make sure air flow is provided for each slot, the end slots are as important as those in the middle. Fabricate what ever duct work or seals which are needed to direct/provide the needed air flow. (One suggestion for sheet metal fabrication, it is generally easier to cut triangles versus circles or arcs for the fan holes. You can use the Greek "Method of Exhaustion" to create a circle or arc from successive triangular cutouts.

Rear Panel Connections

Note the factory "J2" connector can be inserted backwards but will not seat all the way into its mate in the wrong position---it will stick out approximately 1/4 inch. The correct J2 connector orientation seats completely into its mate.

Correct power-on should provide a single RED front panel indicator on the amplifier module. If you get two GREEN indicators on initial power-up, check to see if the power connector is in the WRONG position and you should re-read the prior warnings under "A Few Suggestions" on page 3.

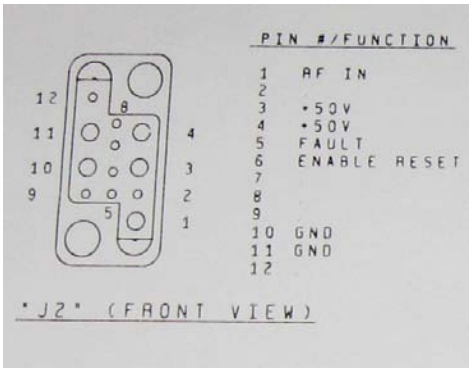

OK, look for the numbers on the black connector, "J2".

J2-5 is the fault out put. Now, the transmitter doesn't care about module numbers, only that one of them has a fault. The wire is white.

J2-6 is the enable. The wire is violet inside the amplifier and orange on the mating power connector. GROUND THIS WIRE TO ENABLE THE AMPLIFIER FOR TRANSMIT. THE SINGLE RED FRONT PANEL INDICATOR TURNS GREEN.

J2-10 and J2-11 are ground or common. J2-3 and J2-4 are positive 50 volts, nominal.

J2-1 in obviously the rf input.

There is a mechanical switch in the front handle, squeeze it to turn the module off. Sometimes you have to squeeze hard. The switch turns off the DC to the FETs. If the amp does not come to life with power applied (red LED front panel when enable line not grounded) the switch is likely in the off position.

The indicator LEDs are composed of left half and right half. The green left half lights with DC power, both halves light with DC and RF.

The red LED lights both halves together.

There is a 15 volt supply internal to the amp that is generated from the 50 volt supply.

There are pass FETs that can turn the 50 volt supply power on and off.

Internal balance, overdrive, VSWR and several other faults will turn the module off.

There are 4 quarter modules.

Flash Codes:

One flash: High VSWR

Two flashes: RF Overdrive

Three flashes: ISO fault, (isolation resistor voltage sensed due to unbalanced RF pallet output)

Four flashes: Voltage, (50 volt supply below 44 volts or above 54 volts)

Five flashes: Temp, (One or more of the RF pallets has overheated)

Six flashes: Pass FET, (problem in the PA module power supply pass transistor circuit)

On multiple faults, the lowest numerical value fault is given priority. If both VSWR and RF Overdrive are present, the LED will blink only once until the VSWR fault is fixed, then it will blink twice showing an RF fault.

Getting on the Air

One possible power supply to investigate is the BL20 Blade Server switching supply. These are available on e-bay for around $35~$40 plus shipping. They operate on 240VAC and provide 51.4 volts at up to 57.0 amps maximum.

A BL-20 Blade Server Switching Power Supply

The diagram below indicates the pin connections. Note the AC power and 50 volt DC power pins are all dual pin connections. It is imperative to use dual DC cables of the appropriate wire gauge (8 or 10 AWG). In the center row of the logic pins, the inner three pins must be tied together to enable the 50 volt output. You will want to fashion a protection cover for the rear panel of the BL20 power supply. Do not block the exiting air flow from the rear panel with the protection cover.

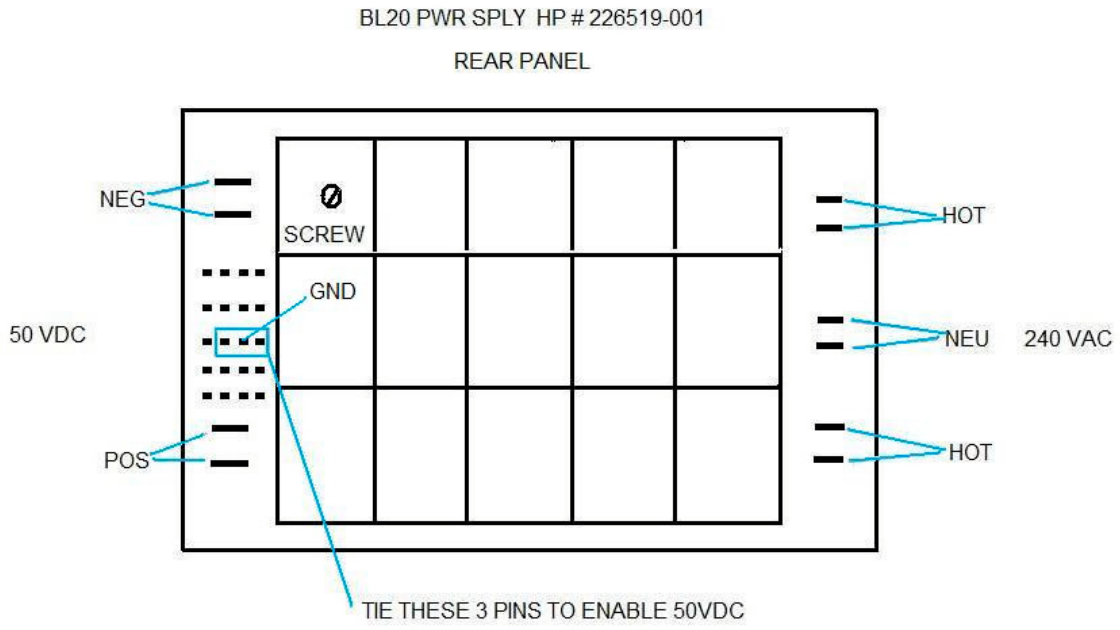

There will be significant digital noise on the two "high" logic pins so it is suggested to bypass each with a .1uf capacitor, as indicated in the schematic below. The two high logic pins can be grounded with a manual switch or relay for controlling power to the amplifier module. This control method is suggested to prevent switching supply overshoot voltage spikes to the amplifier during the supply turn on period. Some ferrite chokes may also be required on the high logic pins as well as the 240VAC and 50VDC lines.

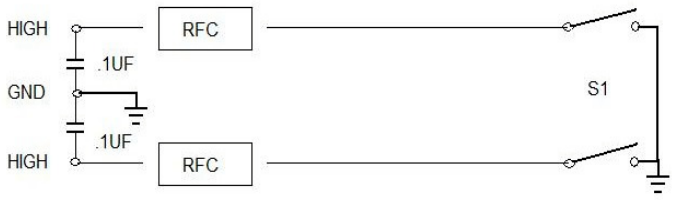

CLOSE S1 TO ENABLE 50 VDC

RFC = ferrite choke as needed for noise suppression

Bias

No attempt was made to adjust the bias on the RF pallets, but if a given pallet or transistor is running warmer than the others, a bias adjustment may be considered. Idle current should be approximately 2 amperes per module, or 1/2 ampere per transistor, for a total static (idle) current module bias of 8 amperes. A TV station engineer familiar with these Harris amplifier modules believed the service class is AB. This was later confirmed in some Harris documentation located online[2]. After testing several amplifier modules we found the idle current varied from as low as 6.5 amperes to as high as 15 amperes, but the majority of the amplifier modules tested were in the 8.0 ampere range for total idle current.

There are two levels of bias adjustment on each RF pallet. R16 is a 500 ohm potentiometer on the +15 volt bias line for a pallet group static bias adjustment. R25, R26, R27, and R28 are individual 5Kohm static bias adjustment potentiometers for each mosfet. In the partial schematic shown below, it is important to note the presence of a single thermistor which is mounted on the RF pallet between the LDMOS transistor pairs. The single thermistor senses average of all four transistor temperatures and reduces the pallet group bias voltage to correct for the rise in pallet group transistor drain current as the temperature rises.

[2] Google search "RFP#EBA136"

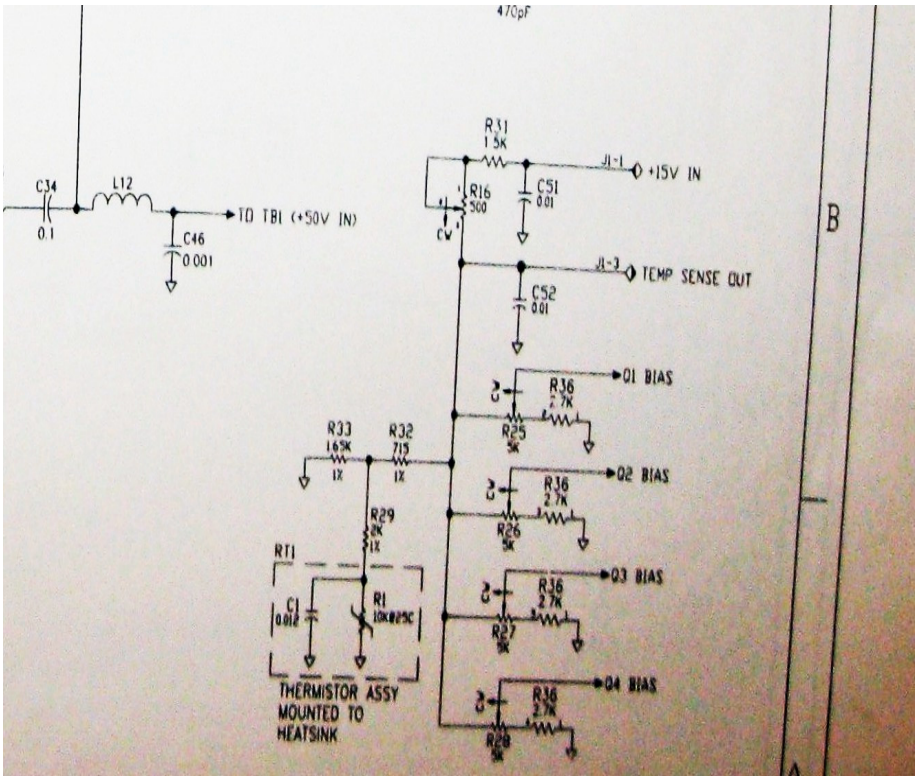

Bias Adjustments

LDMOS amplifiers in general are know to have design issues with "thermal drift" and "secondary breakdown", which can lead to device failure with excessive drive and/or improper biasing. Therefore, the practice of 1500W peak power "whistle" checks of the amplifier output is discouraged for this reason as well as for maintaining proper amplifier linearity. Persons desiring a more complete understanding of this issue are referred to the following article, "Gaining LDMOS Device Linearity and Stability," Microwaves & RF, September 2003. The article was found to be available online at:

www.mwrf.com/Articles/ArticleID/5899/5899.html

Relays

You need to supply RF relays and make sure the amplifier is enabled only after being connected to a 50 ohm power source and a 50 ohm RF load. That is called sequencing. It can be done manually with a foot switch or a sequencer circuit can be used to control the amplifier module operation from a radio PTT

line. Consult the ARRL Handbook for sequencer information. The Enable line on the Harris RF module is to be grounded only after the RF relays switch to the transmit positions.

There are three types of relays that may be usable with this amplifier module depending on the operating power level. The first are Dow Key relays (bottom picture). These have so-so port-to-port isolation but they are infinitely better than a DC frame relay like those found in an SB-220 amplifier. You can get away with a small BNC Dow Key for the input and a larger UHF connector Dow Key relay for the output side.

Next are the N-connector type Transco relays (in upper picture). These relays have high port-to port-isolation which is much preferred to minimize input to output coupling as well as for keeping RF spikes away from your receiver front end. A smaller SMA type Transco can handle a few hundred watts or so and a large type N Transco can handle a kilowatt . Look up the specifications for what ever relays you consider using in this amplifier project and do not operate them beyond their specifications.

For high-power amplifier service at rated 1500W power levels, it is advisable to use vacuum relays. There is an article in April 2008 QST (pp 38-40) for modifying an SB-220 amplifier for 50MHz. The author of this article used a pair of GigaVac SPDT relays to replace the stock frame relay in the SB-220 he converted. Max Gain Systems sells the relays from GigiVac for around $65-70 each. Two are required. Also a small reed relay and a few transistors to get it to

sequence properly similar to the Ameritron ARB-704. These are easy to find parts.

Output Filtering

This amplifier module requires an appropriate output filter to meet FCC requirements for amateur service. An input filter may also be advisable. Suggestions include a suitable pi- or tee-type low pass filter[3] as well as the option of using a pair of quarter-wave stub coax sections spaced one quarter-wave apart electrically[4]. Some KW-rated low-pass filters are/were available commercially for the six meter band. CCI Communications has kits available for the input and output filters. Also check this site http://www.realhamradio.com/DC_54_mhz_lowpass_filter.htm which shows how to construct and tune a 1500 watt low pass filter usable to 54 MHz with 70db notches at 100.2MHz and 150.3MHz. This filter uses 74pf shunt capacitors made from brass and Teflon sheet material, and a brass/Teflon 10pf tuning capacitor. ICE sells a commercial version of this filter for $67 at http://www.iceradioproducts.com/filtersrf.html

Another filter option is the diplexer approach, which uses a high pass filter and low pass filter in combination to route the second and higher order harmonics to a terminated load. An example of such a filter is available at

http://www.ham-radio.com/n6ca/50MHz/50appnotes/50tlpf.html

We can also suggest a simple 5 element Chebychev Tee filter modeled using the online calculator at:

http://www.pronine.ca/cheblf2.htm

Entering these values

Cutoff Frequency = 58.19

Freq Response Ripple = .1db

Characteristic Impedance = 50 ohm

---

[3] RF Amplifier Classics, ARRL

[4] The UHF Compendium, Parts 1 &2, P C.5.1

Number of Components = 5

Entering this data in the Pronine calculator will yield:

L1, L3 = 157 nh (End inductors, 3T #14, .625" ID, .3" Long)
L2 = 270 nh (Center inductor 4.5T #14, .625" ID .45" Long)
C1, C2 = 75 pf (5KV doorknobs, 5%)

The inductor dimensions can be calculated with this online resource:

http://www.pronine.ca/coilcal.htm

You certainly can arrive at other filter solutions with the Pronine or other online calculators. It may be desirable to experiment and choose a design compatible with capacitors you may have available. As a general rule stay several MHz above 50.1MHz for the cutoff frequency and choose a .1dB ripple response to minimize ripple losses.

For the 58MHz 5 Element Chebychev design, the prototype filter came in around 55 MHz as the initial cutoff frequency. Harmonic attenuation was 36dB at 100.2 MHz and 60dB at 150.3MHz. Insertion loss was only .1dB, representing about 18 watts of dissipated power at an 800W amplifier output level. Return loss at 50.1MHz was adjusted to 22 dB (less than 1 percent reflected power). Note the coil orientation and component placement to minimize stray coupling in the photograph below.

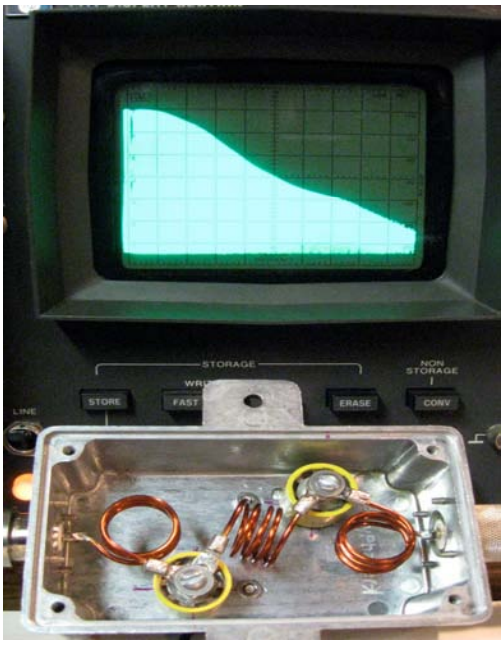

While a spectrum analyzer is a luxury, an MFJ259/269 or other analyzer would be adequate for filter checkout---although it will not show the full extent of the notch impedance due to its measurement range limitations (A 20db notch in a 50 ohm circuit would be Z=1,000 ohms; a 30db notch 3,160 ohms. Out of range limits are Z>650 ohms for the MFJ-259 and Z>2000 ohms for the MFJ-269). Coils L1, L3 can be easily adjusted for 50 ohm matching at 50.1MHz with the MFJ-259/269 and a 50 ohm load. Expand or squeeze the input and output inductors (L1,L3) for lowest return loss (VSWR).

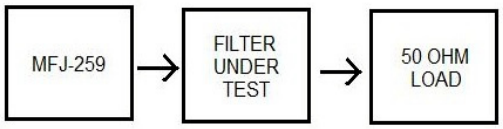

If you have a variable attenuator[5] and a frequency counter with a relative signal strength scale, or another sensitive RF detector, some further filter performance can be investigated using the MFJ-259/269 as a signal source for second and third harmonic tests. In the photo example on the following page, the applied power to the frequency counter is approximately 1/2 milliwatt with a 10db attenuator between it and the MFJ-259B. A further 10 dB reduction was half scale on the bar graph, and a third 10 dB reduction was zero bars on the bar graph. A MMIC amplifier kit like one available from Down East Microwave can also extend the detection range. You may want to choose a MMIC device with a 1.5 dBm or lower saturated output (MSA 0185, etc.) for detection device safety purposes. Make sure you understand the danger zone levels for applied RF power to your test equipment before attempting such measurements. Add a safety attenuator of at least 10~30 dB any time there is uncertainty concerning power levels. Here is a suggested basic test setup:

[5] Such as an Elecraft AT1 Mini Kit
http://www.elecraft.com/manual/E740101%20AT1%20Step%20Attenuator%20Rev%20A.pdf

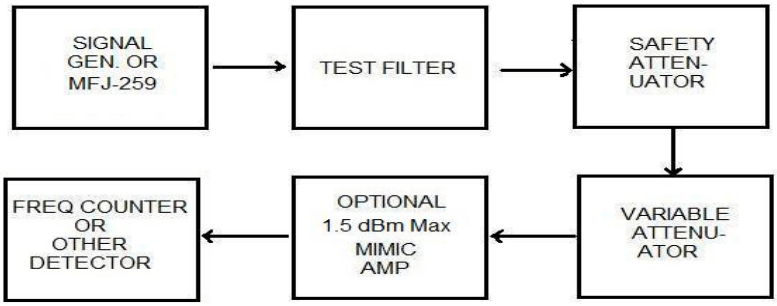

Suggested 2nd or 3rd Harmonic Test Setup

10dB Attenuation for Full Scale on Freq Counter (Approx. .5mw)

I was able to quickly estimate the 100.2 MHz response as over 30 dB with this arrangement (versus 35 dB measured with the spectrum analyzer) using a 10dB-per-step 0~50db attenuator. Note the frequency counter could not lock on a signal much past 120 MHz (having reached minimum sensitivity). With 20 or 30 dB of additional MMIC amp gain, the 3rd harmonic would be easily detected. A safety attenuator is not shown in the diagram after the optional MMIC amplifier, but is advisable to protect the frequency counter or detector until the power level range is known for a given test. Fixed tee and pi attenuators for use through VHF and UHF can be easily built from carbon resistors or chip resistors using reference tables or online calculators[6] Power measurement resolution is determined by the available attenuator step increments. In the above example, second 0~10 dB, 1 dB increment, attenuator would allow a closer measurement capability.

This 5 element Chebychev filter was found to provide just enough attenuation of the second harmonic with the Harris amplifier operated at 500W level to meet the -60db FCC requirement.

Additional Second Harmonic Suppression

For additional 2nd harmonic filtering, we added 100 MHz parallel trap filters[7] before and after the 5 element Chebychev filter. With careful construction,

---

6 http://www.pronine.ca/piasy.htm

7 "A High Power Filter for Six Meters," Bill Orr Handbook, 20th Edition, 1978.

the in-line parallel traps can offer low throughput loss (a few hundredths of a dB) and 12 to 25 dB of harmonic suppression per parallel trap, depending on whether one uses lower Q strip lines (more bandwidth) or higher-Q wire coil inductors (less bandwidth). A 100pf 5KV doorknob was used as the capacitor in both parallel traps.

The parallel traps do not de-tune the Chebychev filter when carefully constructed, which is something to keep in mind if you need some add-on filtering. In our case, the two traps were tuned at 100.0 MHz and 100.5 MHz and provided up to an additional 40 dB of second harmonic attenuation around 100.3MHz The parallel traps can be easily tuned with an MFJ-259B, looking for an SWR peak on the analog meter at the desired stop band frequency.

Throughput SWR at various frequencies can be measured with the MFJ-259B through the parallel trap filter and into a 50 Ohm load. We measured the throughput loss at 50MHz with an old HP430C power meter. The local TV station engineer was kind enough to run a test on his calibrated spectrum analyzer to verify our surplus test equipment measurements for these filters and they were all reasonably close.

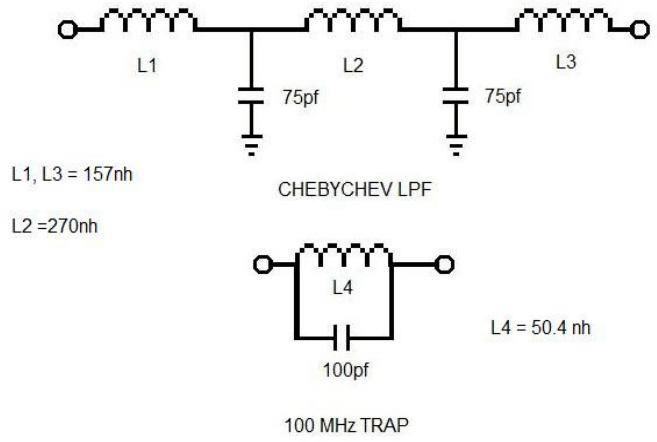

Online Electronic Calculators

Here are some online electronic calculators that provide helpful for filter construction:

* Chebychev Tee Low Pass Filter Calculator http://www.pronine.ca/cheblf2.htm

* Single Layer Air Coil Calculator http://www.pronine.ca/coilcal.htm

* LC Tuned Resonant Circuit Calculator http://www.deephaven.co.uk/lc.html

* Strip line Impedance Calculator

http://www.mantaro.com/resources/impedance_calculator.htm#stripline_impedance

What if Connectors are Misplaced, Lost, or Not Available?

With the potential for a number of these amplifier modules to become available on the surplus market, there is a chance a person interested in such a 6M amplifier project may not find the matching power and RF connectors. The photo essay below shows how to deal with such a situation.

Referenced to the left of the photo, there is room for an RF input connector on the side rear corner of the module near the power connector. Keep the input cable as close as possible to the factory length just to be safe. The B+ and Ground were made with stainless quarter inch hardware, and a terminal strip used for the fault and enable lines. Be careful to make sure no holes are drilled into components, cables, etc., and that all metal shavings are removed from inside the chassis.

If the special Harris RF cable/connector is not available, it is possible to fabricate one from a copper pipe reducer and a 3/16 brass coupler used for rubber/plastic hose couplings. To ensure a secure ground, an extra length of braid was grounded to the chassis and clamped to the coax braid with a stainless hose clamp. Teflon washers for the connector dielectric were cut from 1/16 inch thick Teflon sheet with a scroll saw and shaved round on a drill press to fit the ID of the fabricated connector. (It's easier to shave several at once on a

common mandrel. A carpenter's chisel and razor saw blade are useful shaving/turning tools.)

Fabricated Output Connector

Side View

Note the thin copper shim ring extending slightly beyond the connector body to improve the mechanical coupling to the module's RF output connector.

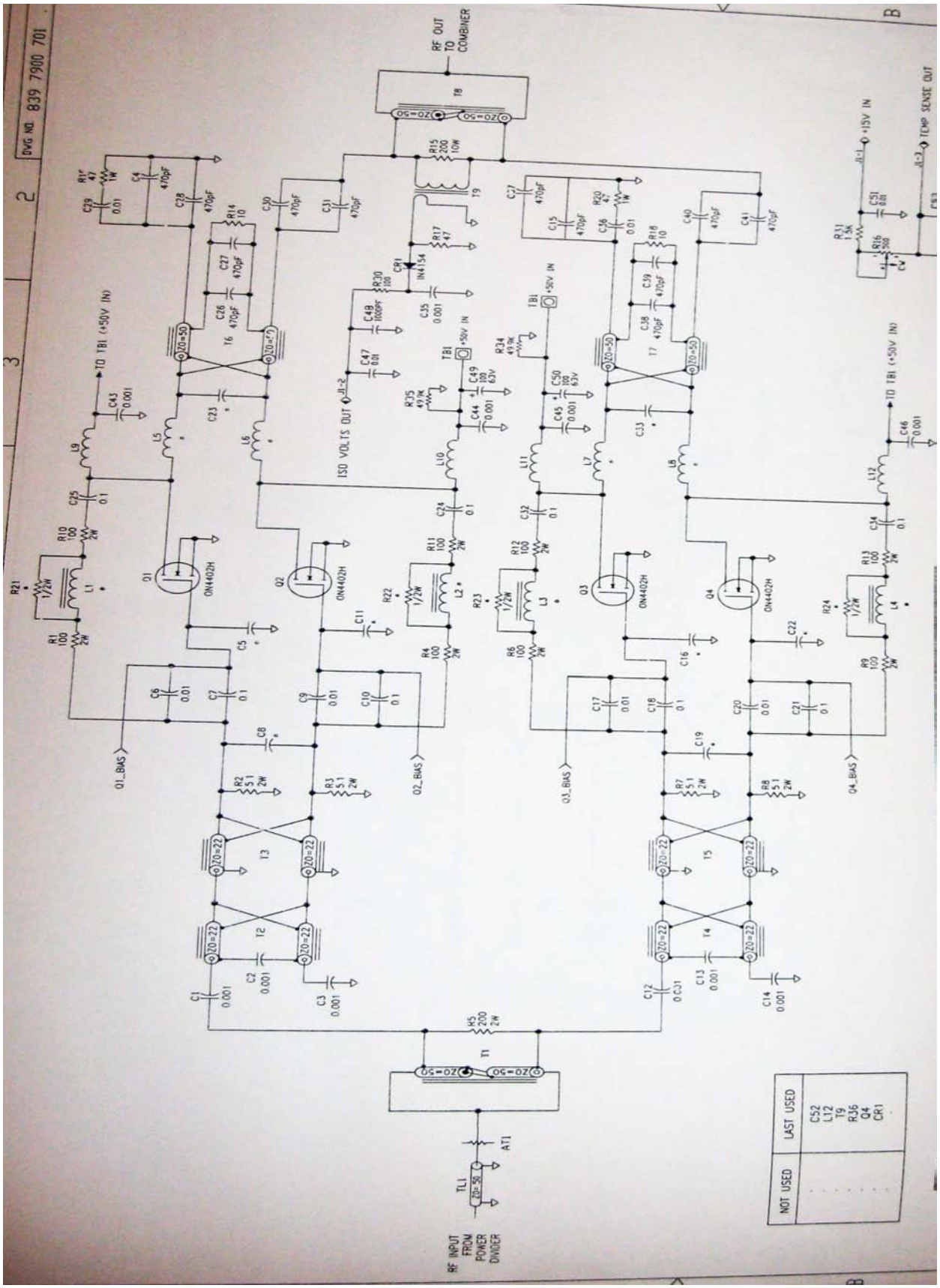
DWG NO. 839 7900 701
RF OUT TO COMBINER
RF INPUT FROM POWER DIVIDER
TO TB1 (+50V IN)
ISO VOLTS OUT
TEMP SENSE OUT
+15V IN
Q1_BIAS
Q2_BIAS
Q3_BIAS
Q4_BIAS
ON4402H
NOT USED
LAST USED
C52
L12
T9
R36
Q4
CR1

RF PWA – FD PARTS	CHANNEL #E2	Channel #2	Channel #E3	Channel #3	Channel #E4	Channel #4	Channel #5	Channel #6
L1,L2,L3,L4	917 2100 710 20T	917 2100 710 20T	917 2100 710 20T	917 2100 711 13T	917 2100 711 13T	917 2100 711 13T	917 2100 711 13T	917 2100 711 13T
C8,C19	519 0068 000 560 PF	519 0060 000 270 PF	519 0060 000 270 PF	519 0052 000 120 PF	519 0052 000 120 PF	519 0052 000 120 PF	519 0052 000 120 PF	519 0052 000 120 PF
C23, C33	519 0041 000 43 PF	519-0038-000 33 PF	519 0034 000 22 PF	519 0041 000 43 PF	519 0041 000 43 PF	519 0041 000 43 PF	519 0041 000 43 PF	519 0041 000 43 PF
AT1 (SELECT IN TEST)	917 2100 612 ATTENUATOR	917 2100 612 ATTENUATOR	917 2100 612 ATTENUATOR	917 2100 612 ATTENUATOR	917 2100 612 ATTENUATOR	917 2100 612 ATTENUATOR	917 2100 612 ATTENUATOR	917 2100 612 ATTENUATOR
C5a, C11a, C16a, C22a	519 0067 000 CAP 510 PF	519 0060 000 CAP 270 PF	519 0060 000 CAP 270 PF	519 0060 000 CAP 270 PF	519 0060 000 CAP 270 PF	519 0060 000 CAP 270 PF	519 0066 000 CAP 470 PF	519 0060 000 CAP 270 PF
C5b, C11b, C16b, C22b	519 0067 000 CAP 510 PF	519 0060 000 CAP 270 PF	519 0060 000 CAP 270 PF	519 0060 000 CAP 270 PF	519 0060 000 CAP 270 PF	519 0060 000 CAP 270 PF	N/A	N/A
L5, L6, L7, L8	917 2100 643 LOOP 2.5 IN	917 2100 644 LOOP 1.85 IN	917 2100 645 LOOP 1.85 IN	917 2100 646 LOOP 1.8 IN	917 2100 647 LOOP 1.8 IN	917 2100 648 LOOP 1.7 IN	917 2100 649 LOOP 1.25 IN	917 2100 650 LOOP 1.2 IN
TL1 (SELECT IN TEST)	917 2100 657 PH SHIFT COAX	917 2100 657 PH SHIFT COAX	917 2100 657 PH SHIFT COAX	917 2100 657 PH SHIFT COAX	917 2100 657 PH SHIFT COAX	917 2100 657 PH SHIFT COAX	917 2100 657 PH SHIFT COAX	917 2100 657 PH SHIFT COAX
R21, R22, R23, R24	540 0056 000 2K OHM, 1/2W	540 0056 000 2K OHM, 1/2W	540 0056 000 2K OHM, 1/2W	N/A	N/A	540 0044 000 620 OHM, 1/2W	N/A	N/A

LB1 LB2

				DATE	DFTM	ENG	ECO NBR	